General Terms and Conditions for Purchase of LCS Cable Cranes GmbH & LCS Pipelines GmbH

Valid as of July 2026

TABLE OF CONTENT

1. GENERAL INFORMATION 4
2. CONCLUSION OF CONTRACT 4
3. DELIVERY 4
3.1. Scope of delivery 4
3.2. Packaging and labelling 4
3.3. Delivery & transfer of risk 5
3.4. Delivery time & delays 5
4. QUALITY, SAFETY & ENVIRONMENT 6
5. TECHNICAL DELIVERY CONDITIONS 6
5.1. Features of the drawings 7
5.2. Components 9
5.2.1. Component category and execution class EXC (class) EN 1090 9
5.2.2. The technical documentation 9
5.3. Personal protective equipment 11
5.4. Working materials 11
5.5. Machines and devices 11
5.6. Incomplete machines and devices and work equipment 11
5.7. Surface treatment 11
5.7.1. Painting 11
5.7.2. Hot-Dip Galvanizing 12
5.7.3. Electro Galvanizing 12
5.8. Heat treatments 12
5.8.1. Nitrocarburising in a salt bath (Tenifer Treating) 12
5.8.2. Carbonitriding 12
5.8.3. Gas Nitriding 12
5.8.4. Case Hardening 12
5.9. Cybersecurity 12
5.9.1. Security Standard at the Supplier 12
5.9.2. Incident Reporting 13
5.9.3. Cybersecurity Audit Right 13
5.9.4. Vulnerability and Patch Management 13

5.9.5. Remote Maintenance Access 13
5.9.6. Software Origin / Bill of Materials 13
6. PRICES & TERMS OF PAYMENT 14
7. WARRANTY 14
8. DAMAGES 14
9. TERMINATION 15
10. FORCE MAJEURE 15
11. PLACE OF JURISDICTION & APPLICABLE LAW 16
12. CONFIDENTIAL INFORMATION & DATA PROTECTION 16
13. FINAL PROVISIONS 16

1. GENERAL INFORMATION

Unless the contracting parties have expressly agreed otherwise in writing, these General Terms and Conditions of Purchase shall apply upon acceptance of the order. They shall apply to the delivery of products or the provision of services by the Supplier on the basis of a written order from the Purchaser.

In these purchasing conditions, LCS informs the Supplier of the type and condition of components or assemblies that are to be provided. There may be additional requirements for various projects, which LCS will attach to the order in the form of a supplementary document.

The contracting parties are hereinafter referred to as Purchaser and Supplier, or individually as Party and jointly as Parties.

2. CONCLUSION OF CONTRACT

The contract is concluded upon receipt of the written declaration of acceptance corresponding to the offer.

Amendments and supplements to the contract must be confirmed in writing to be valid.

The Supplier recognises the exclusive validity of these General Terms and Conditions of Purchase with the delivery or the provision of the service.

The Supplier's General Terms and Conditions shall only be binding on the Purchaser if they are recognised separately by the Purchaser.

Changes to products and services that were already the subject of an earlier delivery or provision of service must be notified to the Purchaser by the Supplier immediately in writing. If the Supplier fails to notify the Purchaser of such changes before accepting the offer, this shall entitle the Purchaser to cancel the order and, if the notification is untimely, to retain the right to delivery or provision of the unchanged products or services.

If import and export licences or foreign exchange permits or other authorisations are required for the performance of the contract, the party responsible for obtaining them must make all reasonable efforts to obtain the necessary licences or permits in good time.

The Supplier may only assign claims arising from the contract to third parties with the Purchaser's written consent.

3. DELIVERY

3.1. Scope of delivery

The scope of delivery includes all products, services and documentation specified in the Purchaser's order, including technical drawings, test reports, declarations of conformity, proper packaging, transport to destination and all additional requirements enclosed in the form of a supplementary document.

3.2. Packaging and labelling

The components must be packed professionally and securely:

- The items shall be labelled with the LCS item number for clear identification
- Coated components must not show any scratches from transport or other damage
- Components are to be protected against corrosion

3.3. Delivery & transfer of risk

Unless otherwise agreed, the delivery period for the goods shall commence at the latest of the following dates:

- Date of conclusion of the contract;
- Date of fulfilment of all technical, commercial and financial requirements incumbent on the Supplier;
- Date on which the Purchaser makes a down payment to be made before delivery of the goods or provision of the service or a letter of credit to be issued in this context is opened.

Unless otherwise contractually agreed, the delivery or performance of service, including transport, customs and accompanying documents shall be made in accordance with INCOTERMS 2020 DAP, at the Purchaser's place of business in Austria. If not agreed otherwise in the contract, the transfer of risk shall also take place upon delivery and unloading of the goods or provision of the service at the Purchaser's place of business.

The Purchaser is entitled to change or cancel the provision of service or delivery of goods in accordance with the order by unilateral declaration even after conclusion of the contract. In this case, the Purchaser shall reimburse the Supplier for all deliveries or services rendered in accordance with the contract.

Transport shall be at the expense and risk of the Supplier. The Supplier shall also bear the costs for insurance and packaging.

The Purchaser is only obliged to pay the price in full once the delivery of goods or performance of service has been provided in full and in accordance with the contract.

The Purchaser reserves the right to reject deliveries with defective packaging, marking or documentation as well as partial or advance deliveries not agreed in writing or, at its discretion, to accept them and store them at the Supplier's expense and risk until proper fulfilment of the contract.

The Supplier is obliged to take back its packaging material free of charge at the Purchaser's request and to dispose of it in an environmentally friendly manner.

To ensure that new products are handled safely, the Supplier must enclose the relevant documents in accordance with the Technical Delivery Conditions.

3.4. Delivery time & delays

The delivery period is specified in the Purchaser's order.

If delays are imminent or recognisable, the Supplier shall immediately take all appropriate measures to avoid delays at no cost to the Purchaser and at the same time inform the Purchaser thereof in writing.

In the event of non-compliance with the agreed deadlines and dates, the Supplier is in default without prior reminder by the Purchaser.

In the event of a delivery delay for which the Supplier is responsible, the Purchaser shall be free to insist on fulfilment of the contract or to withdraw from the contract after setting a reasonable grace period.

4. QUALITY, SAFETY & ENVIRONMENT

At the Purchaser's request, the Supplier shall provide evidence of its operation in accordance with a quality management system in accordance with ISO 9001, a health and safety management system in accordance with ISO 45001 and an environmental management system in accordance with ISO 14001 or an equivalent system by submitting records or other documents.

Deviations from these requirements must be clarified with LCS on a case-by-case basis.

The Supplier shall:

- Adhere to environmental regulations and standards pertinent to the industry, along with sustainable manufacturing practices.
- Utilize minimal packaging materials, prioritizing recyclable, or biodegradable options whenever feasible.
- Uphold ethical labor practices, ensuring fair wages and safe working conditions. Contractor shall refrain in all circumstances from the use of child or forced labor.
- Comply with all national and/or international laws, regulations and ethical business practices related to anti-corruption and anti-bribery.

The Supplier shall also impose the obligation mentioned in Section 4 on any subcontractors and provide the Purchaser with corresponding evidence upon request.

5. TECHNICAL DELIVERY CONDITIONS

All technical documentation for machines, equipment, devices, work equipment and components must be sent by the Supplier complete and on time at the latest with the delivery to the following e-mail address: **documents@lcs-group.com**.

The documentation must comply with the applicable standards and regulations and be provided in a form suitable for further processing. The Purchaser accepts the formats PDF or Microsoft Office (Word, Excel). The Purchaser asks for careful and precise preparation in order to ensure a smooth process in the further processing.

5.1. Features of the drawings

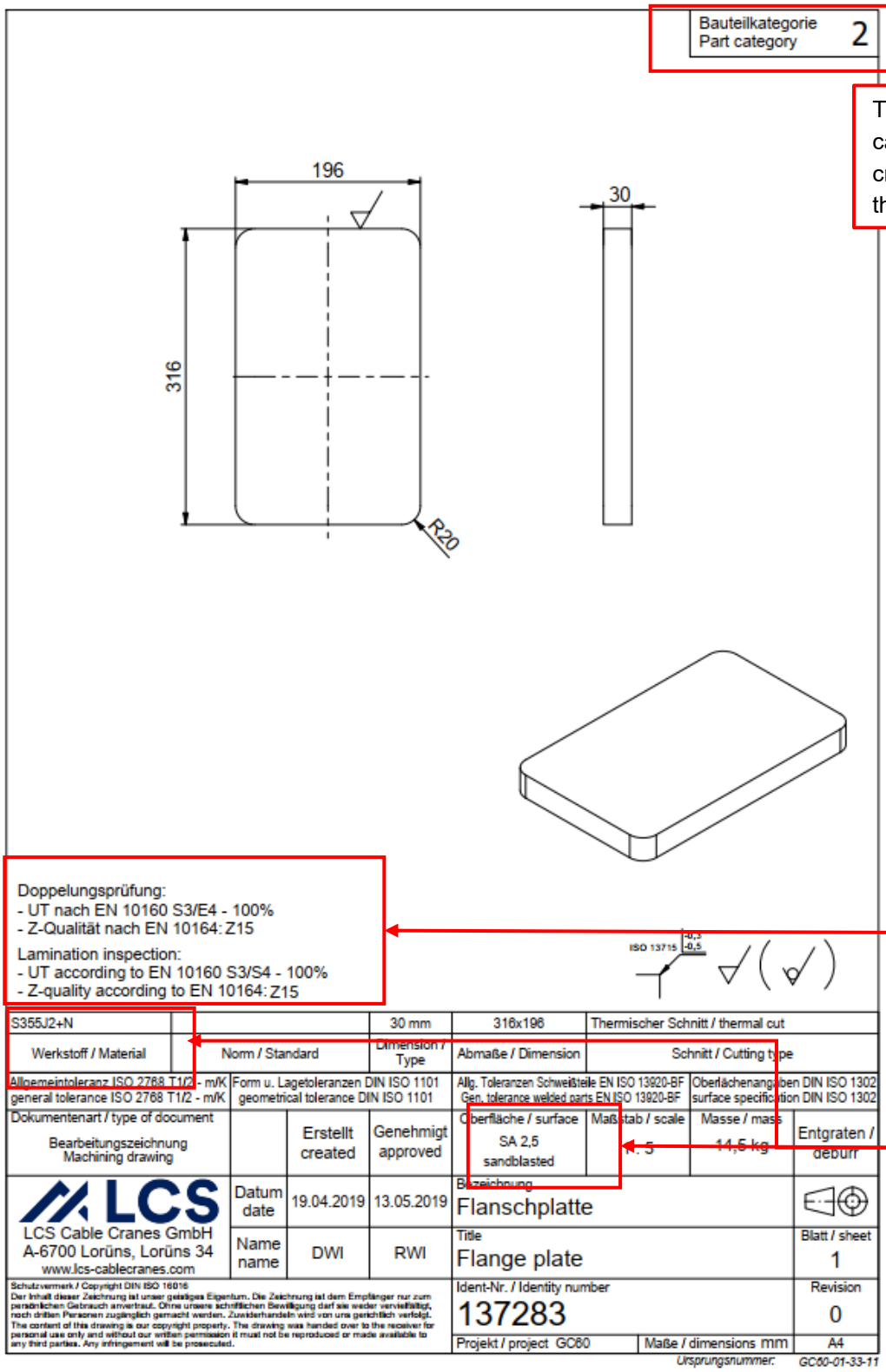

The component category for document creation can be seen at the top right.

Additional requirements must be confirmed based on protocols/material certificates.

The material and surface specification are shown in the drawing header.

Prozessschritte / *process steps:*
1. Schweißen / *welding*
2. Beschichten / *coating*
3. Bearbeitung / *machining*

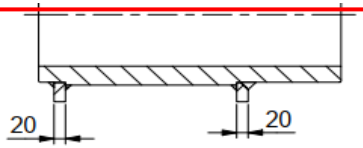

Schweißfolge / *welding sequence prozedure*
1. Pos1 + Pos4
2. 2x Pos3 + 2x Pos2
3. Pos5

Qualitätsanforderungen / Quality Requirements

Ausführung nach EN 1090-2 / Fabrication acc. to EN 1090-2
Outside the EEA, equivalents of ISO 3834 are accepted for welding requirements:

EN 1090-2, EXC1	ISO 3834-4
EN 1090-2, EXC2	ISO 3834-3
EN 1090-2, EXC3	ISO 3834-2

Schweißreihenfolge beachten / Observe welding sequence
Schweißspritzer sind zu entfernen / Weld spatter must be removed

Qualitätsprüfung / quality tests

VT nach/acc. ISO 17637, ISO 5817, 100% nach/acc. Klasse/class B
MT nach/acc. ISO 17638, ISO 23278, ZG 2X: siehe Nähte/ see individual welds spec.
UT nach/acc. ISO 17640, ISO 11666, Klasse/class B / ZG 2: siehe Nähte/ see individual welds spec.

Pos	Stk Qty	Identnr. / Ident-no.	Rv	Beschreibung	Description	Werkstoff / Material	Dimension / Type	Abmaße / Dimension
5	1	152663	0	Blech	Plate	S355J2	20 mm	865x400
4	1	152662	0	Blech	Plate	S355J2	20 mm	1556x380
3	2	152661	0	Blech	Plate	S355J2	25 mm	1806x979
2	2	151963	0	Welle	Shaft	S355J2	Dm 70	L=160
1	1	151954	0	Rohr	Tube	S355J2H	Dm 267x36	L=530

Allgemeintoleranz ISO 2768 T1/2 - m/K general tolerance ISO 2768 T1/2 - m/K	Form u. Lagetoleranzen DIN ISO 1101 geometrical tolerance DIN ISO 1101	Allg. Toleranzen Schweißteile EN ISO 13920-BF Gen. tolerance welded parts EN ISO 13920-BF	Oberflächenangaben DIN ISO 1302 surface specification DIN ISO 1302		
Dokumentenart / type of document Schweißzeichnung Welding drawing	EXC 3	Erstellt created	Genehmigt approved	Oberfläche / surface Feuerverzinkt hot-dip galvanized	Maßstab / scale 1 : 10	Masse / mass 415,0 kg
LCS Cable Cranes GmbH A-6700 Lorüns, Lorüns 34 www.lcs-cablecranes.com	Datum date	01.10.2024	27.11.2024	Bezeichnung Gehänge TS559		
	Name name	DOR	LBI	Title Suspension TS559		Blatt / sheet 1
Schutzvermerk / Copyright DIN ISO 16016 Der Inhalt dieser Zeichnung ist unser geistiges Eigentum. Die Zeichnung ist dem Empfänger nur zum persönlichen Gebrauch anvertraut. Ohne unsere schriftliche Bewilligung darf sie weder vervielfältigt, noch dritten Personen zugänglich gemacht werden. Zuwiderhandeln wird von uns gerichtlich verfolgt. The content of this drawing is our copyright property. The drawing was handed over to the receiver for personal use only and without our written permission it must not be reproduced or made available to any third parties. Any infringement will be prosecuted.				Ident-Nr. / Identity number 152664		Revision 0
				Projekt / project 559	Maße / dimensions mm	A2

Ursprungsnummer: -

Details such as welding sequence and quality requirements are noted on the drawing.

NDT test details are shown on the drawing.

EXC class is shown in the drawing header.

5.2. Components

5.2.1. Component category and execution class EXC (class) EN 1090

The production components are divided into four LCS component categories (0, 1, 2, 3). If the design is carried out as a welded component in accordance with EN 1090, there are 6 possible combinations of component categories and design class.

5.2.2. The technical documentation

The technical documentation must be prepared for all components as shown in table 1:

Technical documentation

Production component					Welded component EN 1090-2 / ISO 3834						
Material	Component category 0	Component category 1	Component category 2	Component category 3	Component category 1 designed as EXC 1	Component category 1 designed as EXC 2	Component category 2 designed as EXC 2	Component category 2 designed as EXC 3	Component category 3 designed as EXC 2	Component category 3 designed as EXC 3	Material
see drawing	Data sheet material	2.2 WZ	3.1 APZ NDT material NDT protocols SGP WBP	3.1 APZ NDT material NDT protocols SGP WBP	EC Declaration of Performance 2.2 WZ SGP	EC Declaration of Performance 2.2 WZ NDT material NDT protocols* SGP WBP	EC Declaration of Performance 2.2 WZ NDT material NDT protocols* SGP WBP	EC Declaration of Performance 2.2 WZ NDT material NDT protocols* SGP WBP	EC Declaration of Performance 2.2 WZ NDT material NDT protocols* SGP WBP	EC Declaration of Performance 2.2 WZ NDT material NDT protocols* SGP WBP	J235J0/ JR
see drawing											S275J0/ JR
see drawing					EC Declaration of Performance 3.1 APZ NDT protocols SGP	EC Declaration of Performance 3.1 APZ NDT material NDT protocols* SGP WBP	EC Declaration of Performance 3.1 APZ NDT material NDT protocols* SGP WBP	EC Declaration of Performance 3.1 APZ NDT material NDT protocols* SGP WBP	EC Declaration of Performance 3.1 APZ NDT material NDT protocols* SGP WBP	EC Declaration of Performance 3.1 APZ NDT material NDT protocols* SGP WBP	S235J2
see drawing											S355
see drawing											S460/ S690
see drawing											Niro steel
see drawing											Studs for stud welding
Cast steel	3.2 APZ	3.2 APZ	3.2 APZ NDT material NDT protocols - SGP - WBP	3.2 APZ NDT material NDT protocols - SGP - WBP	EC Declaration of Performance SGP	EC Declaration of Performance 3.2 APZ WBP	EC Declaration of Performance 3.2 APZ NDT material NDT protocols* WBP	EC Declaration of Performance 3.2 APZ NDT material NDT protocols* WBP	EC Declaration of Performance 3.2 APZ NDT material NDT protocols* WBP	EC Declaration of Performance 3.2 APZ NDT material NDT protocols* WBP	Cast steel

LEGEND:

2.2 WZ = EN 10204 2.2 Works test certificate
3.1 APZ = EN 10204 3.1 Inspection certificate
3.2 APZ = EN 10204 3.2 Inspection certificate
WBP = Heat treatment protocols (stress annealing, tempering, hardening; nitriding process, teneferising)
NDT material = (VT,- MT-, UT,- PT of the material if required according to the drawing send to LCS)
NDT protocols= (VT,- MT-, UT,- PT of the finished component)
SGP=Special quality protocol (Z-quality, notched bar impact values, ...)
EC Declaration of Performance EXC 1 EN 1090-2
Production component = component that is not manufactured by welding
Welded component = component that is manufactured by welding

***If no EC Declaration of performance in accordance with the Construction Products Regulation EU/305/2011 (EN1090) can be created for welded components, all test reports must be sent to LCS!**

Table 1: Supplier documentation

5.3. Personal protective equipment

- EC-Declaration of Conformity
- Operation and maintenance manual in German and English

5.4. Working materials

- Safety data sheets compliant with REACH Regulation EC/1907/2006

5.5. Machines and devices

- EC-Declaration of Conformity
- Operation and maintenance manual in German and English

5.6. Incomplete machines and devices and work equipment

- EC installation instructions and assembly instructions / maintenance instructions in German and English
- Spare parts list in German and English

5.7. Surface treatment

5.7.1. Painting

The quality of the surface treatment of welded constructions and components must meet the following requirements:

- Surfaces must be cleaned and degreased, steel components must in addition be sand blasted SA2,5
- The RAL shade must correspond to the specification on the drawing
- Degree of gloss: „satin gloss”
- 2-coat system (primer / top coat) minimum 80µm each
- Primer: Feycotect Universal primer white 2014-9010 RAL 9010
- Top coat: Feycopur 626 PU DTM
- For special painting, the colour is stated on the order!
- Coat structure C3 in accordance with ISO 12944-2
- Protection time medium
- Bright or primed surfaces according to the drawing – bright surfaces conserved
- Welds without full penetration are to be sealed prior to painting
- Open cavities (e.g. in box profiles) must be preserved with cavity protection (contact LCS for advice)

In order to avoid differences in colour and gloss, other paint manufacturers must be agreed with the purchase department of LCS Cable Cranes GmbH.

5.7.2. Hot-Dip Galvanizing

- Execution in accordance with EN ISO 1461

5.7.3. Electro Galvanizing

- Execution in accordance with EN ISO 2018
- Minimum layer thickness 10µm, maximum layer thickness 25µm, post-treatment blue passivated

5.8. Heat treatments

5.8.1. Nitrocarburising in a salt bath (Tenifer Treating)

- Tenifer-Q or Tenifer-QP process according to specification on the drawing and order
- Air cooling

5.8.2. Carbonitriding

- Hardening depth and degree of hardness according to specification on the drawing and order

5.8.3. Gas Nitriding

- Hardening depth and degree of hardness according to specification on the drawing and order

5.8.4. Case Hardening

- Hardening depth and degree of hardness according to specification on the drawing and order

5.9. Cybersecurity

5.9.1. Security Standard at the Supplier

Where the Supplier delivers control systems, software, firmware, remote maintenance solutions or other information technology components, it shall, upon request by the Purchaser, demonstrate by submission of records or other documentation that it operates in accordance with an information security management system

pursuant to ISO/IEC 27001 or an equivalent recognised standard (e.g. IEC 62443 for automation components). Any deviations from this requirement are to be clarified with the Purchaser on a case-by-case basis.

5.9.2. Incident Reporting

The Supplier shall report security-relevant incidents to the Purchaser – in particular cyberattacks, compromises, data protection breaches, or vulnerabilities that have become known and that affect or may affect the products or services procured by the Purchaser, or the data exchanged in the course of the business relationship – without undue delay, and in any case no later than 24 hours after becoming aware of them, in writing to security@lcs-group.com. Within 72 hours of the report, an assessment of the causes, severity and impact shall follow.

5.9.3. Cybersecurity Audit Right

The Purchaser is entitled, subject to reasonable prior notice and during normal business hours, to verify the Supplier's compliance with the requirements set out in this Section 5.9, either through its own personnel or through third parties engaged by it, or to demand corresponding evidence (e.g. certificates, audit reports, penetration test results).

The Supplier shall impose these obligations on any sub-suppliers, insofar as they are involved in the provision of security-relevant products or services, and shall provide corresponding evidence to the Purchaser upon request.

5.9.4. Vulnerability and Patch Management

The Supplier shall inform the Purchaser without undue delay of any vulnerabilities that become known in delivered software, firmware or information technology components, and shall provide appropriate security updates. The Supplier shall notify the Purchaser of the period, from the date of delivery, during which security updates will be provided for the delivered products (support/end-of-life period).

5.9.5. Remote Maintenance Access

Remote maintenance and remote access solutions for delivered machinery, equipment or control systems shall be secured in accordance with the state of the art (including encryption, individual access credentials, time-limited access, and logging). Access may only take place following prior approval by the Purchaser on a case-by-case basis.

5.9.6. Software Origin / Bill of Materials

Upon request by the Purchaser, the Supplier shall provide an overview of the essential software components contained in delivered software or firmware (software bill of materials, SBOM), including third-party components and open-source elements used.

6. PRICES & TERMS OF PAYMENT

The prices are defined in the Purchaser's order. Any freight and packaging costs, charges, fees, customs duties, import and export costs, insurance and applicable taxes shall be included in the prices but shall be shown separately. All amounts owed by the Purchaser shall be due for payment within 14 (fourteen) days with a 3% (three per cent) discount or within 30 (thirty) days net from fulfilment of the contract in accordance with the contract and invoicing.

Unless otherwise agreed, the place of fulfilment for payments shall at the Purchaser's registered office. The Purchaser reserves the right to withhold payments if the Supplier fails to fulfil its contractual obligations properly.

The Purchaser is entitled to offset claims, the Purchaser has against the Supplier, against claims the Supplier has against the Purchaser.

7. WARRANTY

The Supplier warrants that the delivery or the service provided complies with the relevant regulations and the current state of the art. Machines and systems must comply with the product-specific safety standards.

The Supplier shall provide a warranty for all defects that occur in the goods or the performed service within 2 years, in the case of immovable property within 3 years, from the granting of the operating licence, from the delivery or, in the case of agreed service provision by the Supplier, from its completion. The warranty is independent of whether the defect already existed at the time of delivery or provision of the serices. In case of hidden defects, the warranty period shall not commence until they become recognisable.

A defect consists in the fact that the goods or the provided services do not fulfil a warranted or assumed condition.

The Supplier shall fulfil its warranty obligation by repairing or replacing the defect at the discretion of the Purchaser. If the goods or the performed services prove to be defective when they are processed or utilised, the Supplier shall also reimburse the Purchaser for the costs incurred in connection therewith.

In the event of imminent danger, the Purchaser shall have the right to rectify defects itself or have them rectified by third parties. The costs incurred as a result thereof shall be borne by the Supplier.

For repaired or replaced parts and for improvement work, the warranty period shall commence anew from the date on which the improvement or replacement is carried out. During the warranty period, the Purchaser may give notice of defects of any kind at any time.

8. DAMAGES

The Supplier shall be liable to the Purchaser for all disadvantages arising from a breach of contract, in particular for damage caused by a delayed and/or defective delivery or service provision. This liability shall also extend to deliveries or services provisions of subcontractors.

The Supplier warrants that no rights of third parties are infringed by its delivery or provision of services and shall indemnify and hold the Purchaser harmless against all claims arising from an infringement of such rights.

9. TERMINATION

Each Party may terminate the contract by written notice to the other Party due to the following reasons:

- The other Party breaches an essential term or condition of the contract by an act or omission, including, but not limited to, the obligation set forth in Section 5.9 (Cybersecurity), and does not remedy such a breach within a grace period of 14 (fourteen) days.
- The other Party or its parent company is or becomes insolvent or bankrupt.
- The other Party or its parent company stops or suspends its operation, or sells a substantial part of its business, or a trustee or liquidator is appointed for some or all of the assets of the other Party or its parent company.

The Purchaser may terminate the contract by written notice to the Supplier if the Supplier fails to deliver the goods or provide the services. The same shall apply if the Supplier fails to provide sufficient evidence of its ability to act at the request of the Purchaser in due time. Termination shall only be valid if the Supplier fails to remedy the breach within a grace period of 14 (fourteen) days.

Supplier may terminate the contract by written notice to Purchaser if Purchaser does not pay a contractual invoice when due and does not remedy such breach within a grace period of 14 (fourteen) days.

In the event of cancellation on the basis of the above clauses, the Supplier shall be paid immediately by the Purchaser for all goods that have been delivered to the satisfaction of both Parties up to the date of cancellation. However, the Supplier shall also be entitled to demand the return of products and/or parts thereof already delivered.

The termination is effective from the day which the terminating Party states in the termination notice (which may not be prior to the date of the termination notice. In case no date is mentioned the termination is effective from the day the other Party receives the written notice).

10. FORCE MAJEURE

Supplier shall be released from its responsibility for full or partial non-performance of its obligations if such non-performance is the consequence of a Force Majeure event, including but not limited to: flood, fire, earthquake and other natural disasters, war or military operations, resolutions or decrees of the government in country of deployment, confiscation, embargo, prohibition of foreign-currency transfers, riot, absence of means of transport, sinking of ship, plane crash, general dearth of supply goods, or restrictions of energy consumption.

Each Party shall immediately inform the other Party about the existence of such a Force Majeure event to prevent the enlarging of any loss. The consequences of such a Force Majeure event regarding the obligations of the Parties are determined by Art. 6. Immediately upon cessation of the Force Majeure event each Party shall take all necessary steps to resume performance of its obligations.

If a Force Majeure event lasts for a period of 90 (ninety) consecutive days, either Party may terminate the contract by giving 30 (thirty) days prior written notice.

Any amount due by Purchaser to Supplier in accordance with the contract prior to the date of occurrence of Force Majeure shall be paid independently of occurrence of said Force Majeure. If any such circumstance directly affects the fulfilment of the obligations in time stipulated by the contract, this term should be shifted adequately for the validity period of the corresponding obligation.

11. PLACE OF JURISDICTION & APPLICABLE LAW

These General Terms and Conditions and all rights and obligations under contracts between Purchaser and Supplier shall exclusively be governed by and construed in accordance with the laws of Austria.

The Convention of the United Nations on Contracts for the International Sale of Goods of 11 April 1980, Federal Law Gazette 1998/96, shall expressly be precluded.

All disputes shall be settled by negotiation between the Parties. If the Parties fail to reach an agreement within 3 (three) months, the dispute shall be submitted to the exclusive jurisdiction of the court having jurisdiction over the Purchaser's principal place of business. However, the Purchaser may also apply to another court having jurisdiction over the Lessee.

The Parties may also agree that an arbitral tribunal has jurisdiction.

The place of fulfilment for delivery and payment shall be the registered office of the Purchaser, even if the handover takes place at a different location as agreed.

12. CONFIDENTIAL INFORMATION & DATA PROTECTION

All rights to the data that the Purchaser provides to the Supplier for the fulfilment of the contract shall remain with the Purchaser. The Supplier may only use the documents and all related information for the fulfilment of the contract.

When handling documents, plans, drawings, and technical data provided by the Purchaser, the Supplier must implement appropriate technical and organizational information security measures (including access control and encryption during transmission and storage) that are in line with the state of the art.

The Supplier declares its express consent to the storage of all data (e.g. plans, drawings, technical documents, software) relevant to the business relationship and processing of the orders placed.

Without the prior written consent of the Purchaser, the Supplier shall not be entitled to manufacture products for third parties on the basis of such documents or information or to copy such documents or information or to make them accessible to third parties in whole or in part in any way, unless the fulfilment of the contract necessarily requires this. The Supplier may not mention the Purchaser in publications in connection with the contract without the prior written consent of the Purchaser.

Any personal data transmitted shall be solely stored and used for the purposes of the contractual relationship and, to the extent, which is necessary for the performance of the contract, shall also be passed on to any cooperation partners/vicarious agents involved during the course of the performance of the contract. Supplier declares its consent thereto. Thus, transfer of personal data shall be on a voluntary basis. Supplier has the right to have personal data erased at any time (right to revoke).

To the extent that personal data is stored or otherwise processed, this storage or processing is carried out in accordance with the relevant data protection laws.

13. FINAL PROVISIONS

There are no oral side agreements. Modifications of or amendments to these General Terms and Conditions for Purchase and/or to the contract and/or annexes hereto or to the contract shall be effective only if made in writing. This shall also apply to any waiver of this requirement.

If any of the provisions of these General Terms and Conditions is or becomes invalid, the validity of the remaining provisions hereof shall not be affected thereby.

The invalid provision shall be replaced by a valid provision that comes as close as possible to the intended purpose of the invalid provision in economic and commercial terms.

A change of these General Terms and Conditions for Purchase will not negatively affect an existing pricing which is advantageous for Purchaser.

In the event of any contracts or the General Terms and Conditions for Purchase being drawn up by the Purchaser in German and in a different language, the German version shall prevail.